DUCTED AIR CONDITIONER

Installation Manual

KDI Series

KDI24

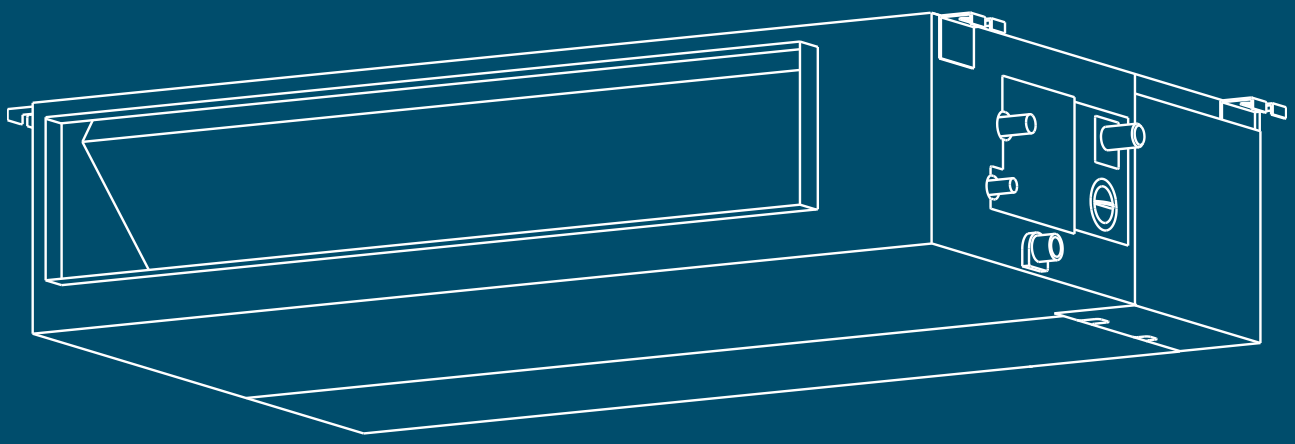

kaden

your perfect climate

Important note

This appliance must be installed in accordance with:

Manufacturer's Installation Instructions

Current AS/NZS 3000, AS/NZS 5149

Local Regulations and Municipal Building Codes including local OH&S requirements

This appliance must be installed, maintained, and removed only by an Authorised Person.

For continued safety of this appliance, it must be installed and maintained in accordance with the manufacturer's Instructions.



Table of contents

1. Safety precautions 4
Note about fluorinated gases 5
2. Accessories 6
3. Installation summary 7
4. Indoor unit installation 8
Indoor unit parts 8
Safety precautions 8
Indoor unit installation instructions 9
Installation place 9
Maintenance space 10
5. Outdoor unit installation 15
Outdoor unit installation instructions 15
Outdoor unit specifications 16
Drain joint installation 17
Notes on drilling hole in wall 17
6. Drainpipe installation 18
Note on drainpipe installation 18
7. Refrigerant piping connection 20
Safety precautions 20
Note on pipe length and elevation 20
Refrigerant piping connection instructions 21
Note on minimum bend radius 23
8. Leak testing and evacuation 24
Leak, pressure test and evacuation 24
Preparations and precautions 25
Before performing evacuation 25
Opening outdoor unit valves 25
Note on adding refrigerant 25
9. Wiring 26
Safety precautions 26
Signal wiring between outdoor and indoor units 28
Indoor unit wiring 28
10. Electrical checks 32
Electrical safety checks 32
Before test run 32
During test run 32
11. Test run 33
Before test run 33
Test run instructions 33
12. Manual operations 34
Manual operations 34
Error codes 35

Important note

Read this manual carefully before installing
or operating your new air conditioning unit.
Make sure to save this manual for future reference.

1. Safety precautions

Read safety precautions before operation and installation

Incorrect installation due to ignoring instructions can cause serious damage or injury.
The seriousness of potential damage or injuries is classified as either a WARNING or CAUTION.



This symbol is a WARNING, and indicates that ignoring instructions may cause death or serious injury.



This symbol is a CAUTION, and indicates that ignoring instructions may cause moderate injury to your person, or damage to your unit or other property.



This symbol indicates that you must never perform the action indicated.

⚠ WARNING

- ⊘ **Do not** share the electrical outlet with other appliances. Improper or insufficient power supply can cause fire or electrical shock.
- ⊘ When connecting refrigerant piping, **do not** let substances or gases other than the specified refrigerant enter the unit. The presence of other gases or substances will lower the unit's capacity, and can cause abnormally high pressure in the refrigeration cycle. This can cause explosion and injury.
- ⊘ **Do not** allow children to play with the air conditioner. Children must be supervised around the unit at all times.

1. Installation must be performed by an authorised dealer or specialist. Defective installation can cause water leakage, electrical shock, or fire.
2. Installation must be performed according to the installation instructions. Improper installation can cause water leakage, electrical shock, or fire.
3. Contact an authorised service technician for repair or maintenance of this unit.
4. Only use the included accessories, parts, and specified parts for installation. Using non-standard parts can cause water leakage, electrical shock, fire, and can cause the unit to fail.
5. Install the unit in a firm location that can support the unit's weight. If the chosen location cannot support the unit's weight, or the installation is not done properly, the unit may drop and cause serious injury and damage.
6. Only fully qualified licensed personnel should install, service or carry out maintenance to this air conditioning unit. All electrical work is to follow local and national wiring standards and the Installation Manual.
7. You must use an independent circuit and single outlet to supply power. **Do not** connect other appliances to the same outlet. Insufficient electrical capacity or defects in electrical work can cause electrical shock or fire.
8. For all electrical work, use the specified cables. Connect cables tightly, and clamp them securely to prevent external forces from damaging the terminal. Improper electrical connections can overheat and cause fire, and may also cause shock.
9. All wiring must be properly arranged to ensure that the control board cover can close properly. If the control board cover is not closed properly, it can lead to corrosion and cause the connection points on the terminal to heat up, catch fire, or cause electrical shock.
10. In certain functional environments, such as kitchens, server rooms, etc., the use of specially designed air-conditioning units is highly recommended.
11. This appliance can be used by children aged from 8 years and above and persons with reduced physical, sensory or mental capabilities or lack of experience and knowledge if they have been given supervision or instruction concerning use of the appliance in a safe way and understand the hazards involved. Children must not play with the appliance. Cleaning and user maintenance must not be made by children without supervision.

CAUTION

⊘ **Do not** install the unit in a location that may be exposed to combustible gas leaks. If combustible gas accumulates around the unit, it may cause fire.

⊘ **Do not** operate your air conditioner in a wet room such as a bathroom or laundry room. Too much exposure to water can cause electrical components to short circuit.

1. The product must be properly grounded at the time of installation, or electrical shock may occur.
2. Install drainage piping according to the instructions in this manual. Improper drainage may cause water damage to your home and property.

Note about fluorinated gases

1. This air-conditioning unit contains fluorinated gases. For specific information on the type of gas and the amount, please refer to the relevant label on the unit itself.
2. Installation, decommissioning, service, maintenance and repair of this unit must be performed by a licensed technician.
3. Product decommissioning and recycling must be performed by a licensed technician.
4. If the system has a leak-detection system installed, it must be checked for leaks at least every 12 months.
5. When the unit is checked for leaks, proper record-keeping of all checks is strongly recommended.
6. Only ARC (Australian Refrigeration Council) licence holders can install and commission this air conditioner. This air conditioner must be installed to meet the requirements of the current version of AS/NZS 5149.
7. It is illegal to vent some types of refrigerant to the atmosphere.

REFRIGERANT

This appliance uses R32 (difluoromethane) refrigerant, which is a flammable gas class 2.2 according to AS/NZS 5149 and must be handled by a refrigeration mechanic with appropriate Australian refrigerant handling licence.

- WARNING risk of fire/flammable material. If the refrigerant is leaked, together with an external ignition source, there is possibility of ignition.
- Read all the OPERATING INSTRUCTIONS carefully before operation.
- Service personnel are required to carefully read the OPERATING INSTRUCTIONS and INSTALLATION MANUAL before operation.
- Further information is available in the OPERATING INSTRUCTIONS, INSTALLATION MANUAL and the like.

Certain levels of refrigerant require minimum room sizes. Please ensure that these minimum room sizes are adhered to for standard installations (up to 10m pipe length). If larger refrigerant charges than standard are used then please consult AS/NZS 60335.2.40 to determine the safe minimum floor area for the installation.

Make sure that the area has been made safe by having suitable ventilation and is free from ignition sources before charging or recovering the charge of R32.

2. Accessories

The air conditioning system comes with the following accessories. Use all of the installation parts and accessories to install the air conditioner. Improper installation may result in water leakage, electrical shock and fire, or cause the equipment to fail.

	Name	Shape	Quantity
Tubing and fittings	Soundproof/insulation sheath		2
Cooling and heating	Drain joint	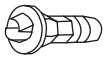	1
	Seal ring	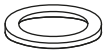	1
Others	Owner's manual		1
	Installation manual		1
	Display panel (for testing purposes only)	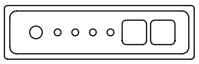	1
	Wired controller		1
EMC magnetic ring	Magnetic ring – wrap the electric wires S1 & S2 around the magnetic ring twice		1

3. Installation summary

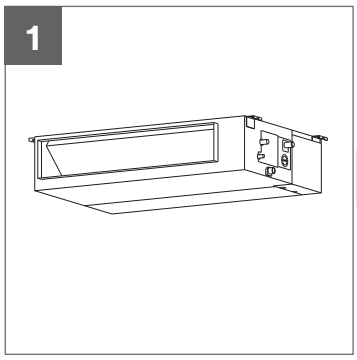

Install the indoor unit *(page 8)*

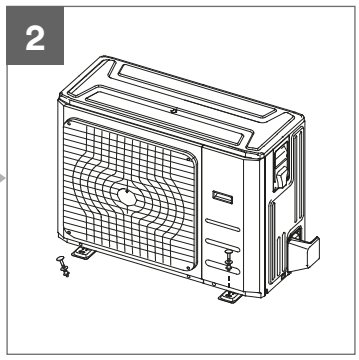

Install the outdoor unit *(page 15)*

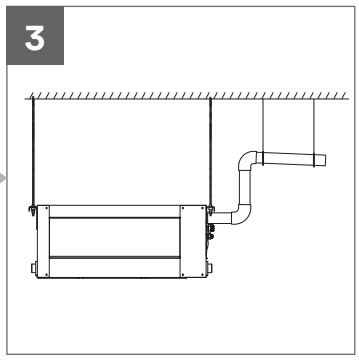

Install the drainpipe *(page 18)*

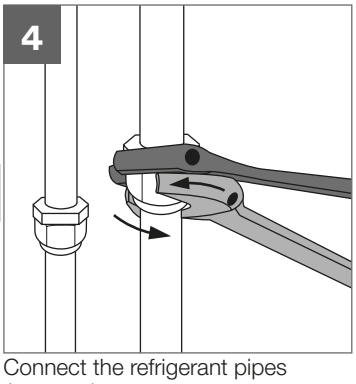

Connect the refrigerant pipes *(page 20)*

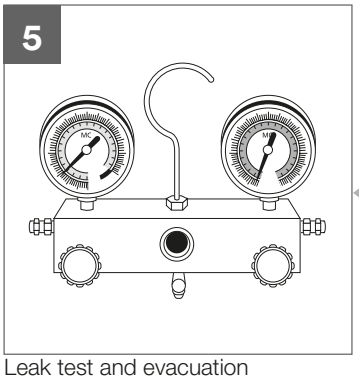

Leak test and evacuation *(page 24)*

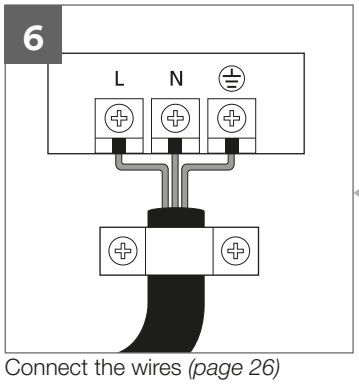

Connect the wires *(page 26)*

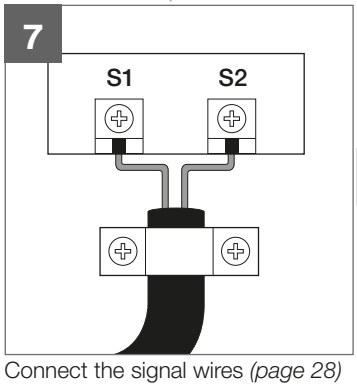

Connect the signal wires *(page 28)*

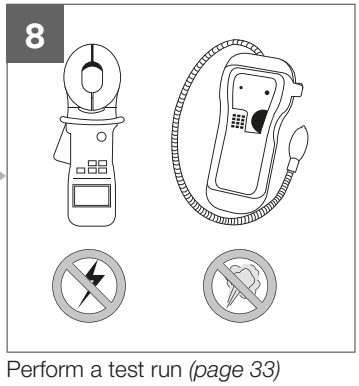

Perform a test run *(page 33)*

4. Indoor unit installation

Indoor unit parts

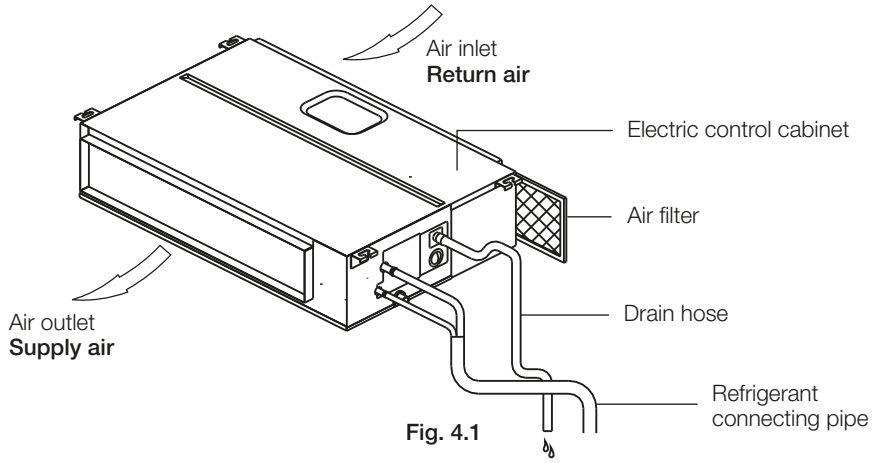

Fig. 4.1

Safety precautions

WARNING

Securely install the indoor unit on a structure that can sustain its weight. If the structure is too weak, the unit may fall, causing personal injury, unit and property damage, or even death.

CAUTION

Install the indoor and outdoor units, cables and wires at least 1m from televisions or radios to prevent static or image distortion. Depending on the appliances, a 1m distance may not be sufficient.

Indoor unit installation instructions

Step 1: Select installation location

The indoor unit should be installed in a location that meets the following requirements:

- ✓ Enough room for installation and maintenance.
- ✓ Enough room for the connecting pipe and drainpipe.
- ✓ The ceiling is horizontal and its structure can sustain the weight of the indoor unit.
- ✓ The air inlet and outlet are not impeded.
- ✓ The airflow can fill the entire room.
- ✓ There is no direct radiation from heaters.
- ✓ It is embedded installation.

CAUTION

Do not install unit in the following locations:

- ⊘ Where oil drilling or fracking is taking place.
- ⊘ Coastal areas with high salt content in the air.
- ⊘ Near geothermal activity and corrosive gas.
- ⊘ Buildings that may experience power fluctuations.
- ⊘ Enclosed spaces.
- ⊘ Areas with strong electromagnetic waves.
- ⊘ Areas that store flammable materials or gas.
- ⊘ Rooms with high humidity, such as bathrooms or laundry rooms.

Installation place

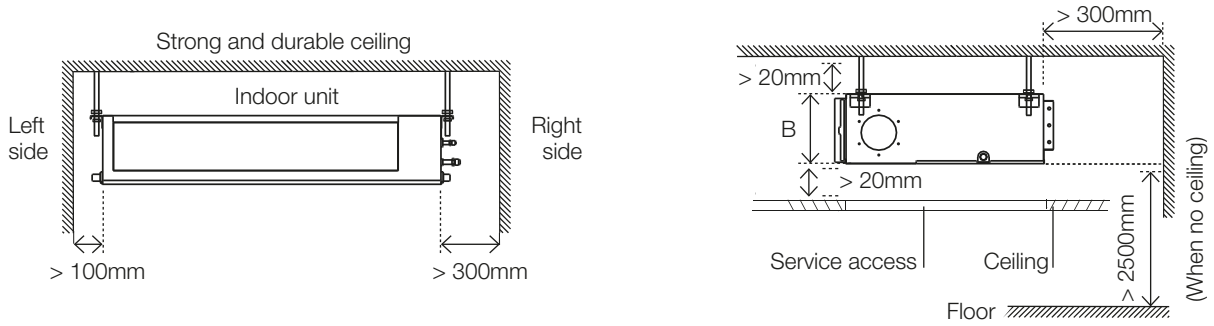

Fig. 4.2

Maintenance space

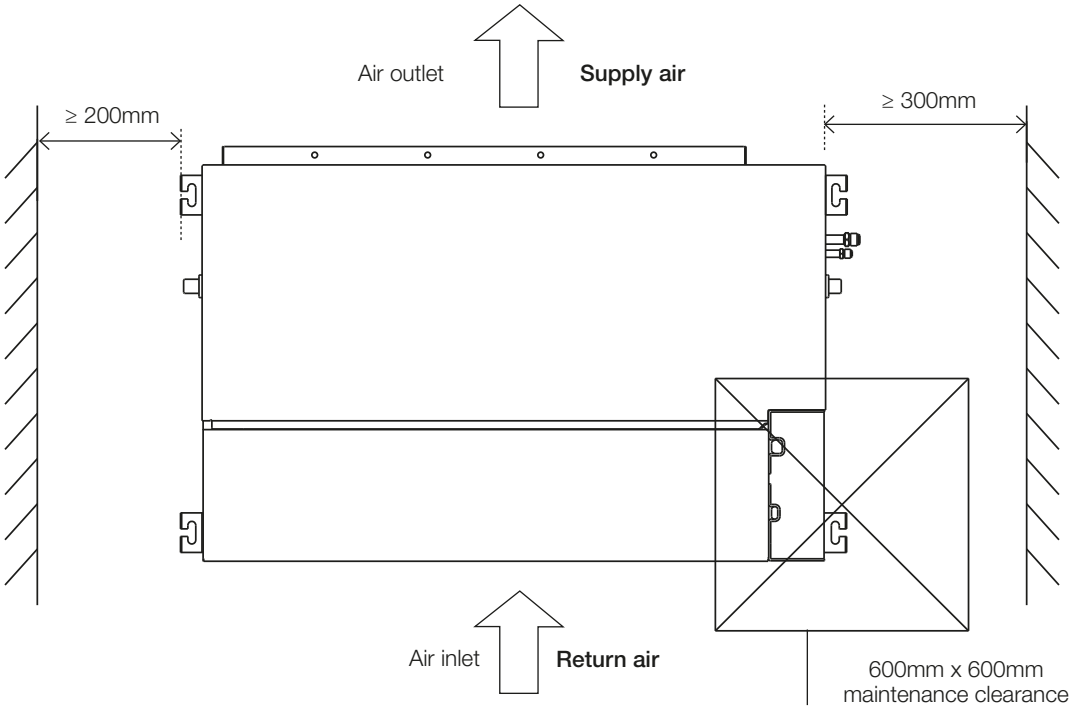

Fig. 4.3

Step 2: Hang indoor unit

1. Please refer to the following diagrams to locate the four positioning screw bolt holes on the ceiling. Be sure to mark the places where you will drill ceiling hook holes.

Air outlet dimensions

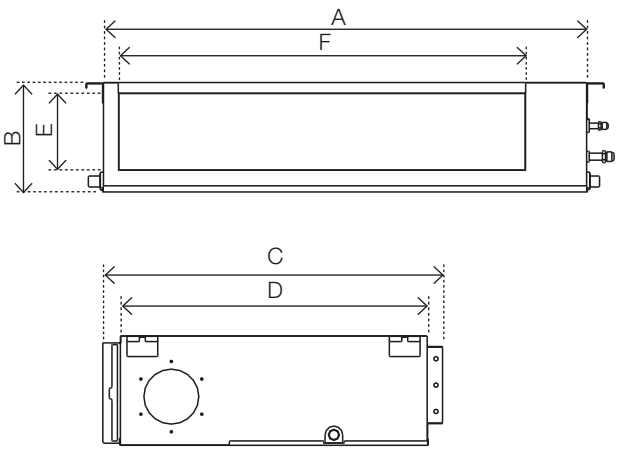

Air inlet dimensions

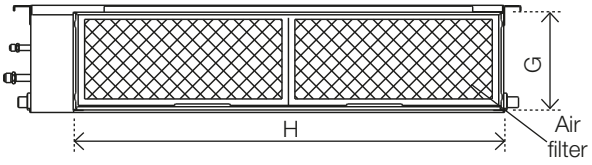

Descending ventilation opening and mounted hook

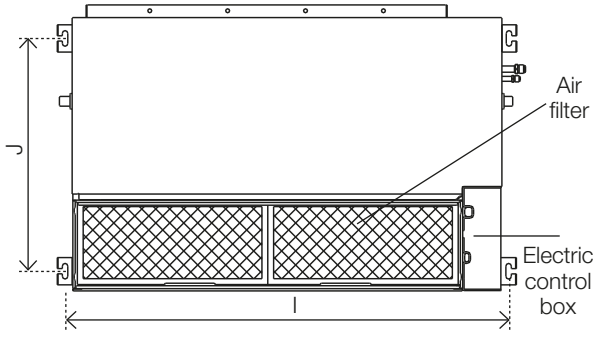

Fig. 4.4

Table 4.1 (Unit: mm)

Model	Outline dimension				Air outlet opening size		Air return opening size		Size of mounted lug	
	A	B	C	D	E	F	G	H	I	J
KDI24	1100	249	774	700	175	926	228	1001	1140	598

Wood

Place the wood mounting across the roof beams, then install the hanging screw bolts. *(See Fig. 4.5)*

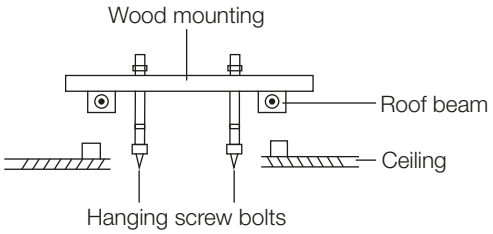

Fig. 4.5

New concrete bricks

Inlay or embed the screw bolts. *(See Fig. 4.6)*



Fig. 4.6

Original concrete bricks

Use an embedding screw bolt, crock and stick harness. *(See Fig. 4.7)*

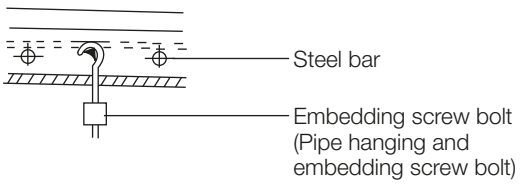

Fig. 4.7

Steel roof beam structure

Install and use the supporting steel angle. *(See Fig. 4.8)*

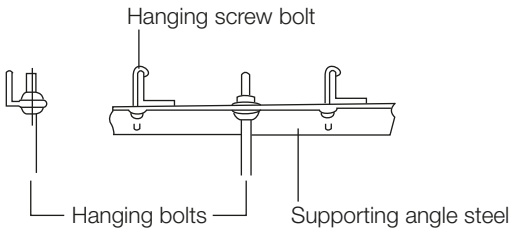

Fig. 4.8

CAUTION

The unit body must be completely aligned with the hole. Ensure that the unit and the hole are the same size before moving on.

2. Install and fit pipes and wires after you have finished installing the main body. When choosing where to start, determine the direction of the pipes to be drawn out. Especially in cases where there is a ceiling involved, align the refrigerant pipes, drain pipes, and indoor and outdoor lines with their connection points before mounting the unit.
3. Install hanging screw bolts.
   • Cut off the roof beam.
   • Strengthen the point at which the cut was made. Consolidate the roof beam.
4. Drill 4 holes 10cm deep at the ceiling hook positions in the internal ceiling. Be sure to hold the drill at a 90° angle to the ceiling.
5. Install the four suspension bolts.
6. Mount the indoor unit with at least two people to lift and secure it. Insert suspension bolts into the unit's hanging holes. Fasten them using the washers and nuts provided. *(See Fig. 4.9)*

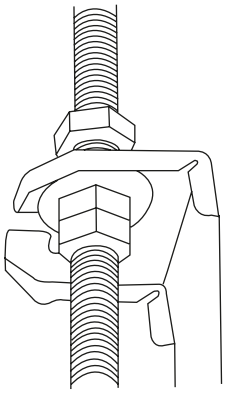

Fig. 4.9

7. Mount the indoor unit onto the hanging screw bolts with a block. Position the indoor unit flat using a level indicator to prevent leaks. *(See Fig. 4.10)*

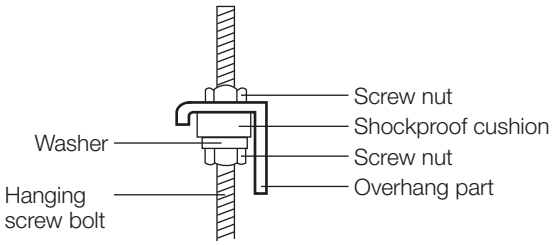

Fig. 4.10

NOTE: Confirm the minimum drain tilt is 1/100 or more.

Step 3: Duct and accessories installation

1. Install the filter (optional) according to the size of the air inlet.
2. Install the flexible tie-in between the body and the duct.
3. The air inlet and air outlet duct should be far enough apart to avoid air passage short-circuit.
4. Connect the duct according to the following diagram:

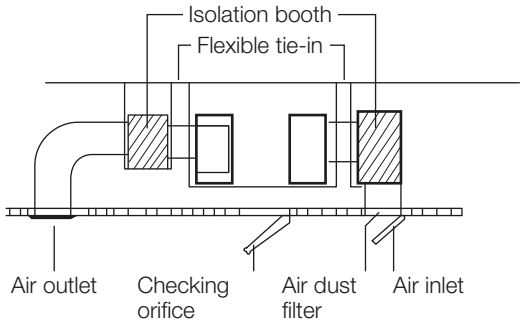

Fig. 4.11

5. Refer to the following static pressure guidelines when installing the indoor unit.

Table 4.2

Model	Static pressure (Pa)
KDI24	0~160

Change the fan motor static pressure according to external duct static pressure.

Note

1. **Do not** place the connecting duct weight on the indoor unit.
2. When connecting the duct, use a non-flammable canvas tie-in to prevent vibrating.
3. Insulation foam must be wrapped outside the duct to avoid condensate. An internal duct under-layer can be added to reduce noise, if the end-user requires.

Step 4: Adjust the air inlet direction (from rear side to under-side)

1. Take off the ventilation panel and flange.

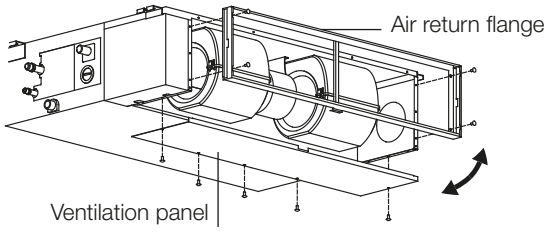

Fig. 4.12

2. Change the mounting positions of the ventilation panel and air return flange.

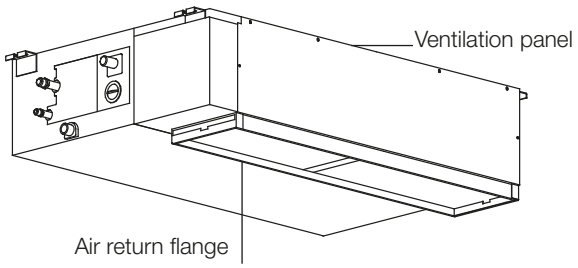

Fig. 4.13

3. When installing the filter mesh, fit it into the flange as illustrated in the following figure.

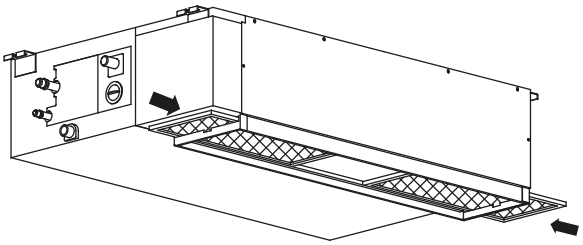

Fig. 4.14

Note

All the figures in this manual are for demonstration purposes only. The air conditioner you have purchased may be slightly different in design, though similar in shape.

Step 5: Adjust the air inlet direction

Dimension:

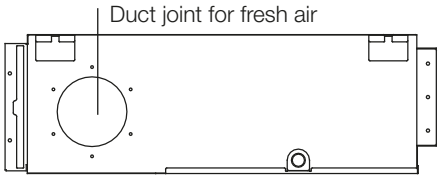

Model KDI24

Duct joint for fresh air dimensions

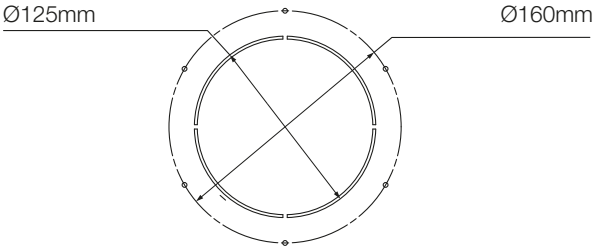

Fig. 4.15

Step 6: Motor and drain pump maintenance (the rear ventilated panel is used as an example)

Motor maintenance:

1. Take off the ventilated panel.
2. Take off the blower housing.
3. Take off the motor.

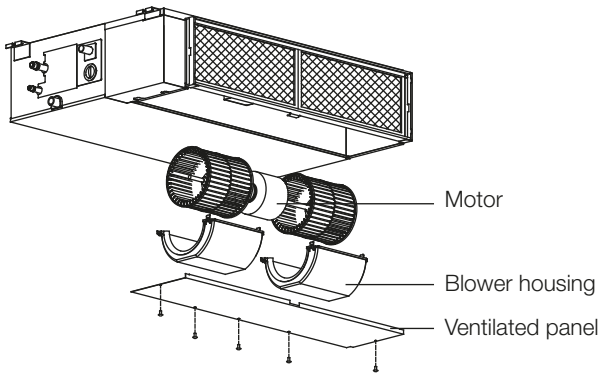

Fig. 4.16

Pump maintenance:

1. Remove four screws from the drain pump.
2. Unplug the pump power supply and water level switch cable.
3. Detach the pump.
4. Replace all components to re-assemble and complete maintenance.

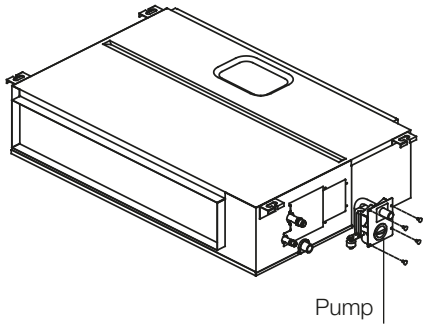

Fig. 4.17

5. Outdoor unit installation

Outdoor unit installation instructions

Step 1: Select installation location

The unit should be installed in a location that meets the following requirements:

- ✓ Place the outdoor unit as close to the indoor unit as possible.
- ✓ Ensure that there is enough room for installation and maintenance.
- ✓ The air inlet and outlet must not be obstructed or exposed to strong wind.
- ✓ Ensure the location of the unit will not be subject to snowdrifts, accumulation of leaves or other seasonal debris. If possible, provide an awning for the unit. Ensure the awning does not obstruct airflow.
- ✓ The installation area must be dry and well ventilated.
- ✓ There must be enough room to install the connecting pipes and cables and to access them for maintenance.

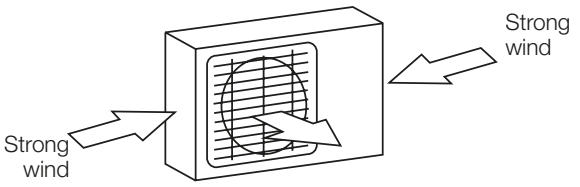

Fig. 5.1

- ✓ The area must be free of combustible gases and chemicals.
- ✓ The pipe length between the outdoor and indoor unit may not exceed the maximum allowable pipe length.
- ✓ If possible, do not install the unit where it is exposed to direct sunlight.
- ✓ If possible, make sure the unit is located far away from your neighbours' property so that the noise from the unit will not disturb them.
- ✓ If the location is exposed to strong winds (for example: near a seaside), the unit must be placed against the wall to shelter it from the wind. If necessary, use an awning.
- ✓ Install the indoor and outdoor units, cables and wires at least 1 metre from televisions or radios to prevent static or image distortion. Depending on the radio waves, a 1 metre distance may not be enough to eliminate all interference.

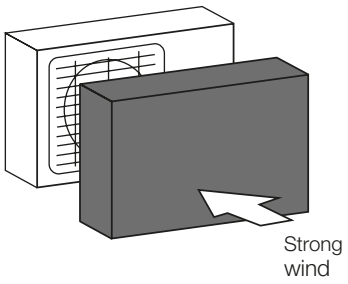

Fig. 5.2

Step 2: Install outdoor unit

Fix the outdoor unit with anchor bolts (M10).

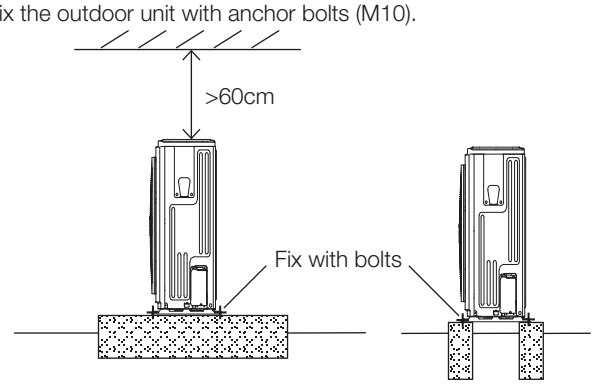

Fig. 5.3

CAUTION

- Be sure to remove any obstacles that may block air circulation.
- Make sure you refer to Length specifications *(See Fig. 5.7)* to ensure to ensure there is enough room for installation and maintenance.

Outdoor unit specifications

Split type outdoor unit

(Refer to Fig. 5.4, Fig. 5.5, Fig. 5.6, Fig. 5.7 and Table 5.1)

Fig. 5.4

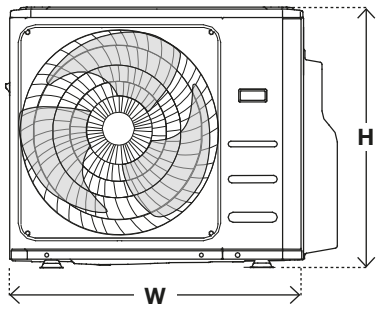

Fig. 5.5

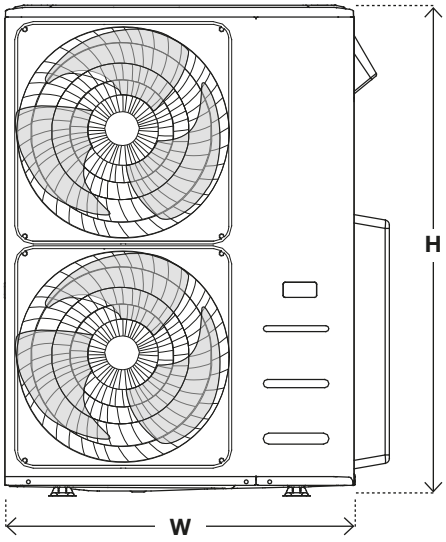

Fig. 5.6

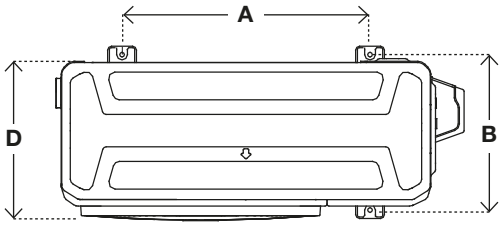

Table 5.1 Length specifications of split type outdoor unit

Outdoor unit dimensions W x H x D	Mounting dimensions	
	Distance A	Distance B
890mm x 673mm x 342mm	673mm	403mm

NOTE: The minimum distance between the outdoor unit and walls described in the installation guide does not apply to airtight rooms. Be sure to keep the unit unobstructed in at least two of the three directions (M, N, P). *(See Fig. 5.7)*

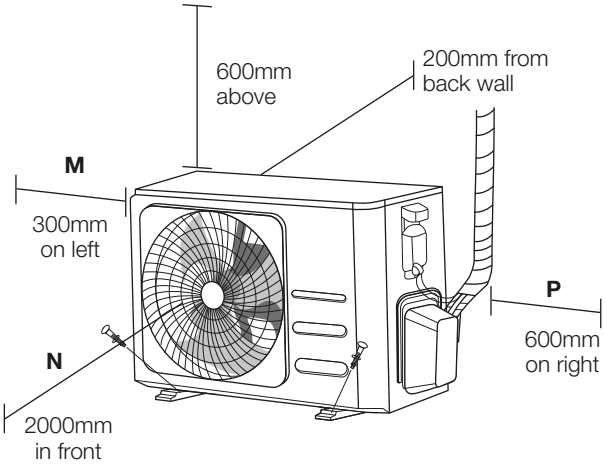

Fig. 5.7

Rows of series installation

Table 5.2 The relations between H, A and L are as follows.

	L	A
L ≤ H	L ≤ 1/2H	250mm or more
	1/2H < L ≤ H	300mm or more
L > H	Can not be installed	

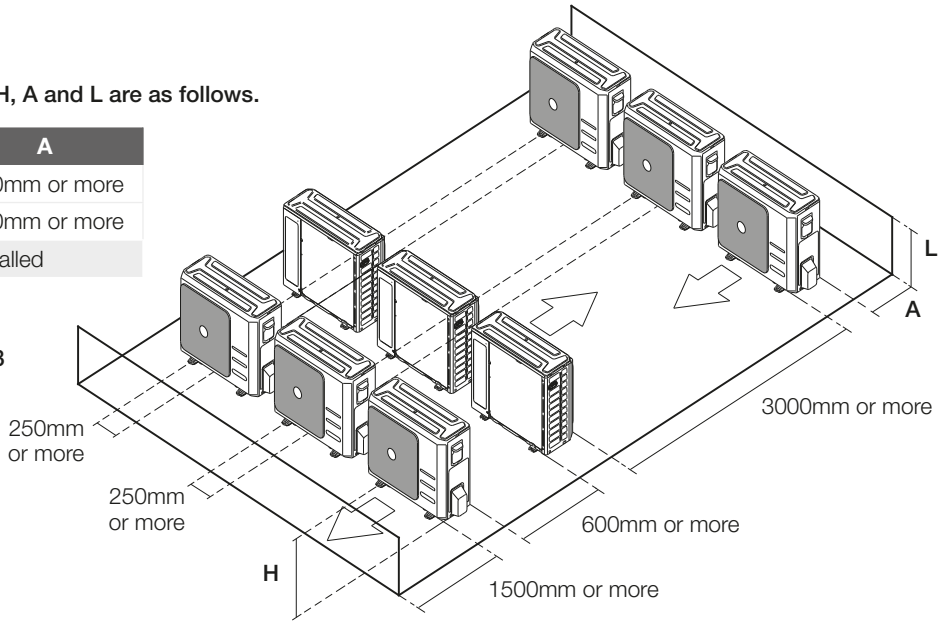

Fig. 5.8

Drain joint installation

If the drain joint comes with a rubber seal *(See Fig. 5.9 A)*, do the following:

1. Fit the rubber seal on the end of the drain joint that will connect to the outdoor unit.
2. Insert the drain joint into the hole in the base pan of the unit.
3. Rotate the drain joint 90° until it clicks in place facing the front of the unit.
4. Connect a drain hose extension (not included) to the drain joint to redirect water from the unit during heating mode.

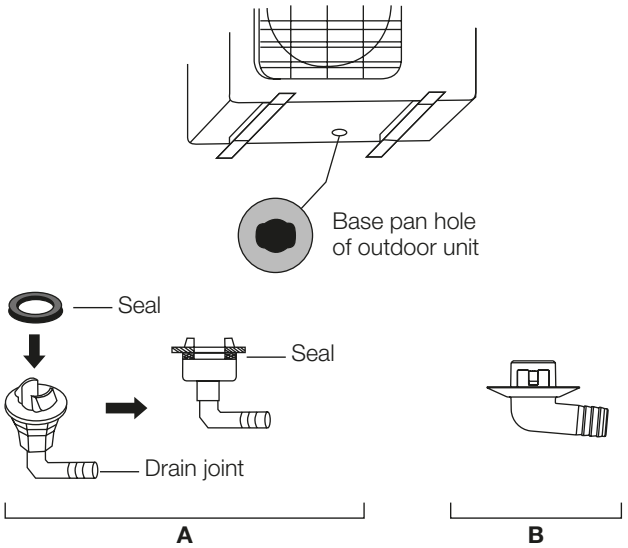

Fig. 5.9

If the drain joint doesn't come with a rubber seal *(See Fig. 5.9 B)*, do the following:

5. Insert the drain joint into the hole in the base pan of the unit. The drain joint will click in place.
6. Connect a drain hose extension (not included) to the drain joint to redirect water from the unit during heating mode.

Notes on drilling hole in wall

You must drill a hole in the wall for the refrigerant piping, and the signal cable that will connect the indoor and outdoor units.

1. Determine the location of the wall hole based on the location of the outdoor unit.
2. Using a 65mm core drill, drill a hole in the wall.
3. Place the protective wall cuff in the hole. This protects the edges of the hole and will help seal it when you finish the installation process.

NOTE: When drilling the wall hole, make sure to avoid wires, plumbing, and other sensitive components.

6. Drainpipe installation

The drainpipe is used to drain water away from the unit. Improper installation may cause unit and property damage.

CAUTION

- Insulate all piping to prevent condensation, which could lead to water damage.
- If the drainpipe is bent or installed incorrectly, water may leak and cause a water-level switch malfunction.
- In HEAT mode, the outdoor unit will discharge water. Ensure that the drain hose is placed in an appropriate area to avoid water damage and slippage.
- **Do not** pull the drainpipe forcefully. This could disconnect it.

Indoor drainpipe installation

Install the drainpipe as illustrated in *Fig. 6.1*.

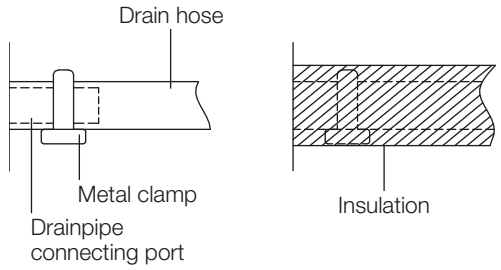

Fig. 6.1

1. Cover the drainpipe with heat insulation to prevent condensation and leakage.
2. Attach the mouth of the drain hose to the unit's outlet pipe. Sheath the mouth of the hose and clip it firmly with a pipe clasp. *(See Fig. 6.2)*

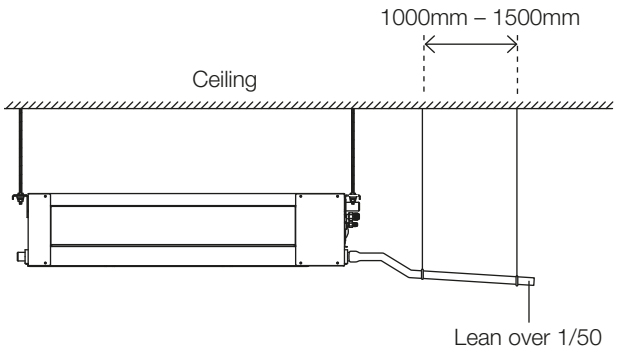

Fig. 6.2

Note on drainpipe installation

- When using an extended drainpipe, tighten the indoor connection with an additional protection tube. This prevents it from pulling loose.
- The drainpipe should slope downward at a gradient of at least 1/100 to prevent water from flowing back into the air conditioner.
- To prevent the pipe from sagging, space hanging wires every 1 – 1.5m.
- If the outlet of the drainpipe is higher than the body's pump joint, use a lift pipe for the indoor unit's exhaust outlet. The lift pipe must be installed no higher than 55cm from the ceiling board. The distance between the unit and the lift pipe must be less than 20cm. Incorrect installation could cause water to flow back into the unit and flood.
- To prevent air bubbles, keep the drain hose level or slightly tiled up (<75mm).

Drainpipe installation for units with a pump

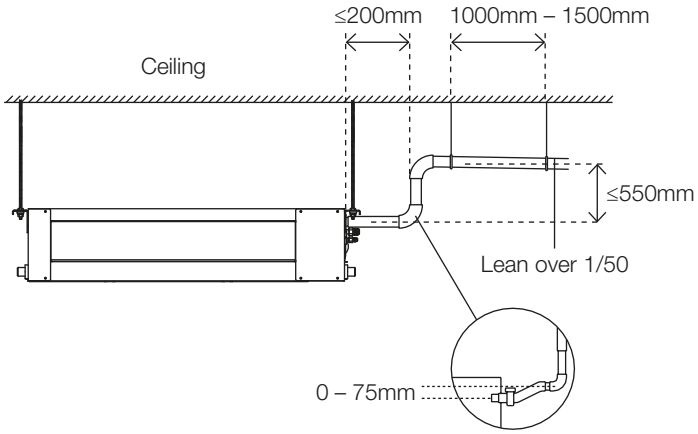

Fig. 6.3

NOTE: If the drain pump spigot is not used, the drain pump will still engage if the drain tray fills and activates the water level sensor. This can lead to water leakage. Possible actions to avoid water leakage:

1. Disconnect power to drain pump.
2. Plumb drain pump spigot into gravity fed drain.

3. Using a 65mm core drill, drill a hole in the wall. Make sure that the hole is drilled at a slight downward angle, so that the outdoor end of the hole is lower than the indoor end by about 12mm. This will ensure proper water drainage *(See Fig. 6.4)*. Place the protective wall cuff in the hole. This protects the edges of the hole and will help seal it once you finish installation.

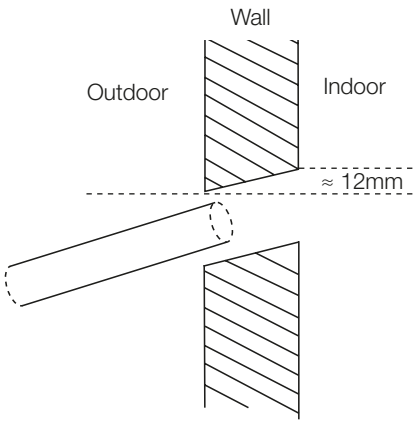

Fig. 6.4

NOTE: When drilling the hole, make sure to avoid wires, plumbing, and other sensitive components.

4. Pass the drain hose through the wall hole. Make sure the water drains to a safe location where it will not cause water damage or a slipping hazard.

NOTE: The drainpipe outlet should be at least 5cm above the ground. If it touches the ground, the unit may become blocked and malfunction. If you discharge the water directly into a sewer, make sure that the drain has a U or S pipe to catch odours that might otherwise come back into the house.

NOTE: When connecting multiple drainpipes, install the pipes as shown in *Fig. 6.5.*

With drain pump

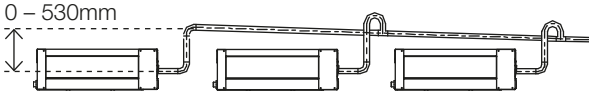

Without drain pump

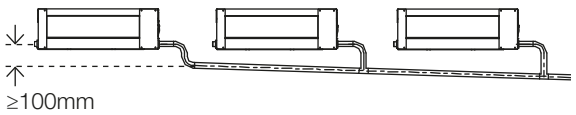

Fig. 6.5

Drainage pump test procedure

Check that the drainpipe is unhindered. This test should be performed on newly built houses before the ceiling is painted.

1. Remove the test cover. Fill the water pan with 2 litres of water.

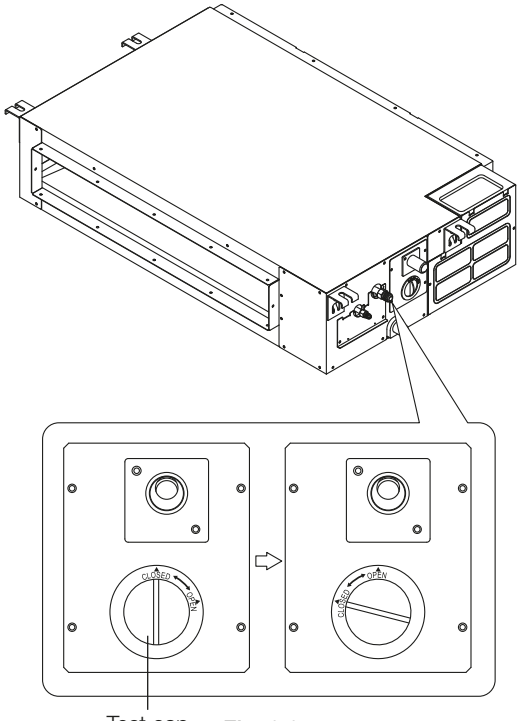

Fig. 6.6

2. Turn on the unit in COOLING mode. You will hear the drain pump. Check whether the water is discharged properly (a 1 minute lag is possible, depending on the length of the drain pipe). Check whether water leaks from the joints.
3. Turn off the air conditioner and put the cap back on.

7. Refrigerant piping connection

Safety precautions

WARNING

- All filed piping must be completed by an ARC licensed technician and must comply with all local and national regulations including AS/NZS 5149 and Australian wiring regulations.
- When the air conditioner is installed in a small room, measures must be taken to prevent the refrigerant concentration in the room from exceeding the safety limit in the event of refrigerant leakage. If the refrigerant leaks and its concentration exceeds its proper limit, hazards due to lack of oxygen may result.
- When installing the refrigeration system, ensure that air, dust, moisture or foreign substances **do not** enter the refrigerant circuit. Contamination in the system may cause poor operating capacity, high pressure in the refrigeration cycle, explosion or injury.
- Ventilate the area immediately if there is refrigerant leakage during the installation. Leaked refrigerant gas is both toxic and flammable. Ensure there is no refrigerant leakage after completing the installation work.

Note on pipe length and elevation

Ensure that the length of the refrigerant pipe, the number of bends, and the drop height between the indoor and outdoor units meets the requirements shown in the following table :

Table 7.1 The maximum length and drop height based on models. (Unit: metres)

Type of model	Length of piping	Maximum drop height
KDI24	50	25

CAUTION

Oil traps

If oil flows back into the outdoor unit's compressor when the indoor unit is installed higher than the outdoor unit, this might cause liquid compression or deterioration of oil return.

Oil traps in the rising gas piping can prevent this. An oil trap should be installed every 10m of vertical gas piping. *(See Fig. 7.1)*

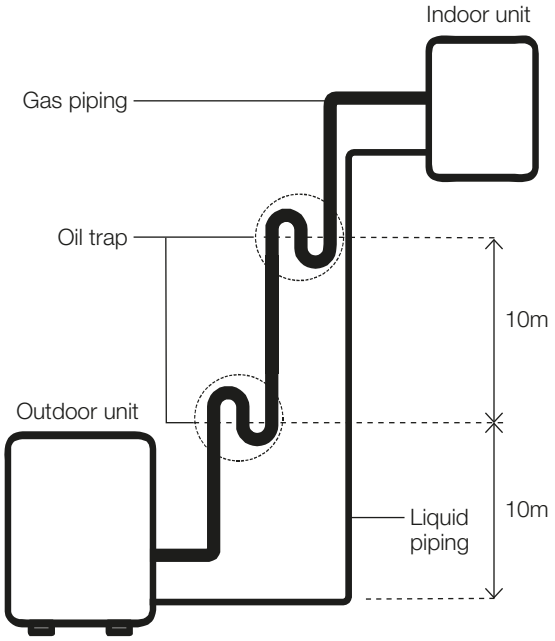

The indoor unit is installed higher than the outdoor unit

Fig. 7.1

CAUTION

If the outdoor unit is installed higher than the indoor unit:

It is recommended that vertical suction risers not be up-sized. Proper oil return to the compressor should be maintained with suction gas velocity. If velocities drop below 7.62m/s, oil return will be decreased. An oil trap should be installed every 6m of vertical gas piping. *(See Fig. 7.2)*

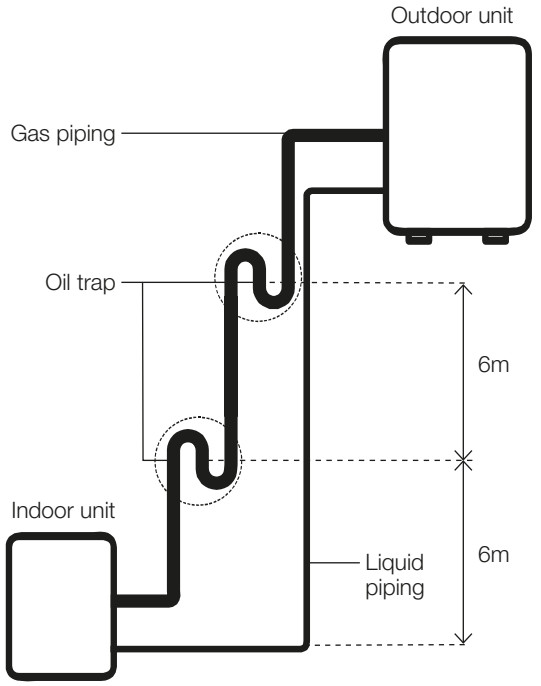

The outdoor unit is installed higher than the indoor unit

Fig. 7.2

Size of joint pipes for indoor unit

Table 7.2 Size of joint pipes for R32 indoor unit

Type of model	Size of main pipe (mm)	
	Gas side	Liquid side
KDI24	15.9mm – 5/8"	9.5mm – 3/8"

Refrigerant piping connection instructions

CAUTION

- **Do not** install the connecting pipe until both indoor and outdoor units have been installed. Insulate both the gas and liquid piping to prevent water leakage.

Step 1: Cut pipes

When preparing refrigerant pipes, take extra care to cut and flare them properly. This will ensure efficient operation and minimise the need for future maintenance.

1. Measure the distance between the indoor and outdoor units.
2. Using a pipe cutter, cut the pipe a little longer than the measured distance.

CAUTION

Do not deform pipe while cutting. Be extra careful not to damage, dent, or deform the pipe while cutting. This will drastically reduce the heating efficiency of the unit.

3. Make sure that the pipe is cut at a perfect 90° angle. Refer to *Fig. 7.3* for examples of good and bad cuts.

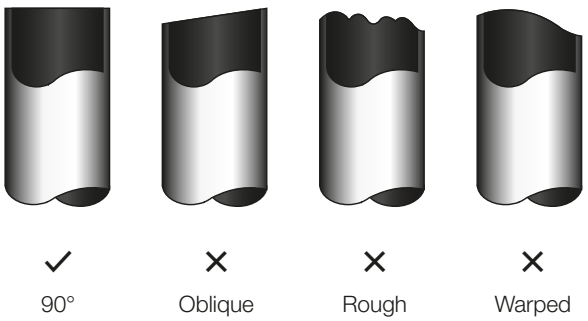

Fig. 7.3

Step 2: Remove burrs

Burrs can affect the airtight seal of the refrigerant piping connection. They must be completely removed.

1. Hold the pipe at a downward angle to prevent burrs from falling into the pipe.
2. Using a reamer or deburring tool, remove all burrs from the cut section of the pipe.

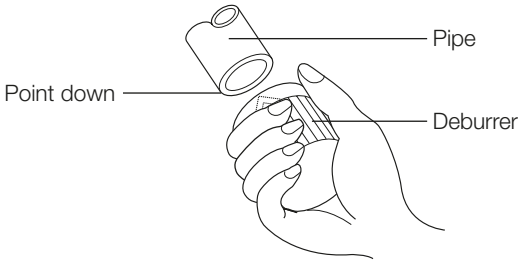

Fig. 7.4

Step 3: Flare pipe ends

Proper flaring is essential to achieve an airtight seal.

1. After removing burrs from cut pipe, seal the ends with PVC tape to prevent foreign materials from entering the pipe.
2. Sheath the pipe with insulating material.
3. Place flare nuts on both ends of pipe. Make sure they are facing in the right direction, because you can't put them on or change their direction after flaring. *(See Fig. 7.5)*

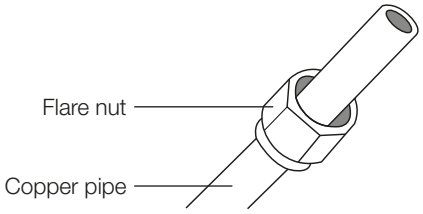

Fig. 7.5

4. Remove PVC tape from ends of pipe when ready to perform flaring work.
5. Clamp flare form on the end of the pipe. The end of the pipe must extend beyond the flare form.

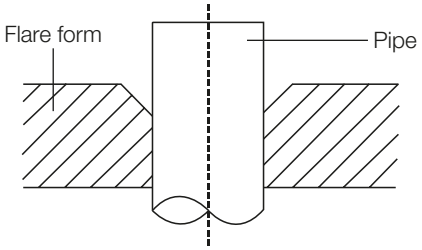

Fig. 7.6

6. Place flaring tool onto the form.
7. Turn the handle of the flaring tool clockwise until the pipe is fully flared. Flare the pipe in accordance with the dimensions shown in *Table 7.3*.

Table 7.3 Piping extension beyond flare form

Pipe gauge	Tightening torque	Flare dimension (A) (Unit: mm)	
		Min.	Max.
ø 9.5	25 – 26 N.m (255 – 265 kgf.cm)	13.2	13.5
ø 15.9	45 – 47 N.m (459 – 480 kgf.cm)	19.2	19.7

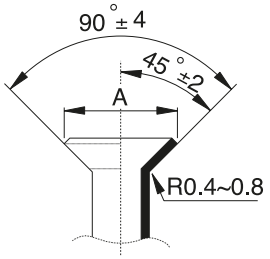

Fig. 7.7

8. Remove the flaring tool and flare form, then inspect the end of the pipe for cracks and even flaring.

Step 4: Connect pipes

Connect the copper pipes to the indoor unit first, then connect it to the outdoor unit. You should first connect the low pressure pipe, then the high pressure pipe.

1. When connecting the flare nuts, apply a thin coat of refrigeration oil to the flared ends of the pipes.
2. Align the centre of the two pipes that you will connect.

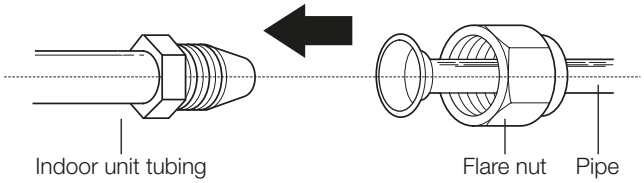

Fig. 7.8

3. Tighten the flare nut as tightly as possible by hand.
4. Using a spanner, grip the nut on the unit tubing.
5. While firmly gripping the nut, use a torque wrench to tighten the flare nut according to the torque values in *Table 7.3*.

NOTE: Use both a spanner and a torque wrench when connecting or disconnecting pipes to/from the unit.

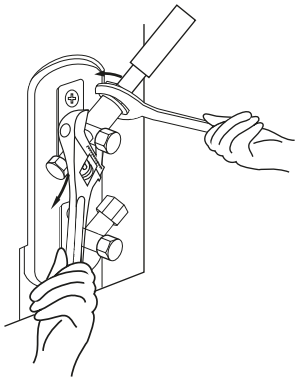

Fig. 7.9

CAUTION

- Ensure that you wrap insulation around the piping. Direct contact with the bare piping may result in burns or frostbite.
- Make sure the pipe is properly connected. Over-tightening may damage the bell mouth and under-tightening may lead to leakage.

Note on minimum bend radius

Carefully bend the tubing in the middle according to the diagram below. **Do not** bend the tubing more than 90° or more than 3 times.

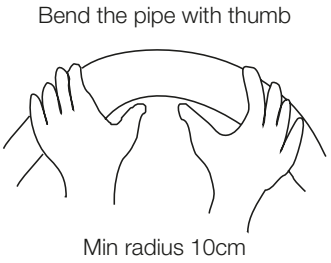

Fig. 7.10

6. After connecting the copper pipes to the indoor unit, wrap the power cable, signal cable and the piping together with binding tape.

NOTE: Do not intertwine signal cable with other wires. While bundling these items together, **do not** intertwine or cross the signal cable with any other wiring.

7. Thread this pipeline through the wall and connect it to the outdoor unit.
8. Insulate all the piping, including the valves of the outdoor unit.

CAUTION

Check to make sure there is no refrigerant leak after completing the installation work. If there is a refrigerant leak, located and repair the leak before evacuating the system (refer to the Leak testing and evacuation section of this manual).

8. Leak testing and evacuation

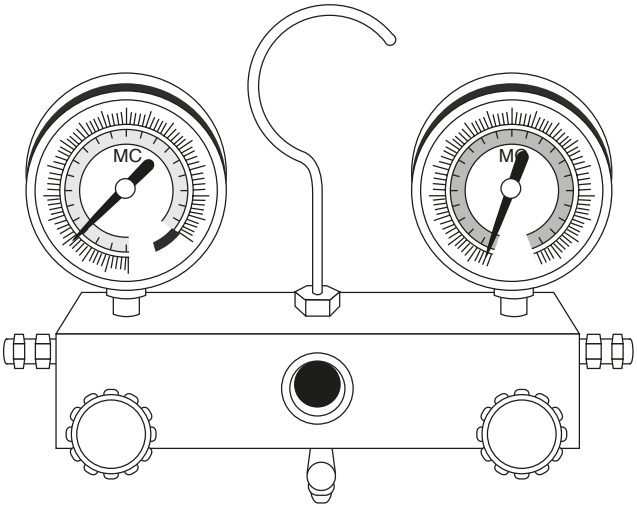

Leak, pressure test and evacuation

The interconnecting pipe work and indoor unit must be pressure tested at 1000kpa and leak tested before being evacuated. Before using the manifold gauge and vacuum pump, read their operation manuals to familiarise yourself with how to use them properly.

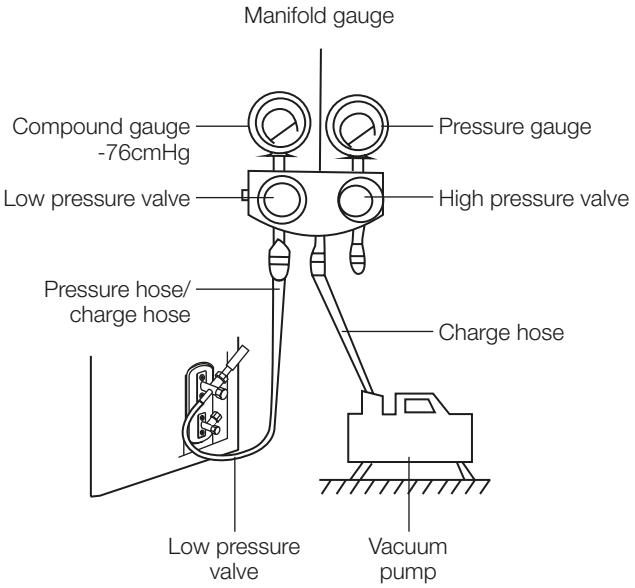

Fig. 8.1

1. Connect the charge hose of the manifold gauge to the outdoor unit's low pressure valve.
2. Connect another charge hose from the manifold gauge to the vacuum pump.
3. Monitor test pressure and check with a leak detector and bubble solution. Safely release the test pressure.
4. Open the Low pressure side of the manifold gauge. Keep the High pressure side closed.
5. Turn on the vacuum pump to evacuate the system.
6. Evacuate the interconnecting pipes to <=500 microns.
7. Close the low pressure side of the manifold gauge, and turn off the vacuum pump.
8. Wait for 5 minutes, then check that there has been no change in system vacuum.
9. If the vacuum does not settle, repeat from Step 1 of Leak, pressure test and evacuations. If there is no change in system vacuum, unscrew the cap from the packed valve (high pressure valve).

Preparations and precautions

Air and foreign matter in the refrigerant circuit can cause abnormal rises in pressure, which can damage the air conditioner, reduce its efficiency, and cause injury. Use a vacuum pump and manifold gauge to evacuate the refrigerant circuit, removing any non-condensible gas and moisture from the system.

Evacuation should be performed upon initial installation and when unit is relocated.

Before performing evacuation

- ✓ Check to make sure that both high pressure and low pressure pipes between the indoor and outdoor units are connected properly in accordance with the Refrigerant piping connection section of this manual.
- ✓ Pressure test the interconnecting pipes.
- ✓ Check to make sure all wiring is connected properly.

Opening outdoor unit valves

1. Insert hexagonal wrench into the packed valve (high pressure valve) and open the valve by turning the wrench in a 1/4 counterclockwise turn. Listen for gas to exit the system, then close the valve after 5 seconds.

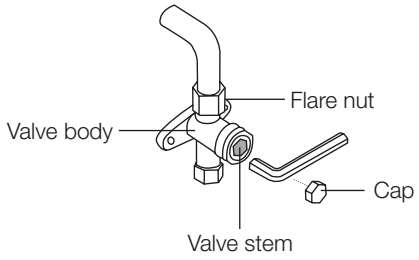

Fig. 8.2

2. Watch the pressure gauge for one minute to make sure that there is no change in pressure. The pressure gauge should read slightly higher than atmospheric pressure.
3. Remove the charge hose from the service port.
4. Using hexagonal wrench, fully open both the high pressure and low pressure valves.
5. Tighten valve caps on all three valves (service port, high pressure, low pressure) by hand. You may tighten it further using a torque wrench if needed.

Note on adding refrigerant

Some systems require additional charging depending on pipe lengths. The additional refrigerant to be charged can be calculated using the below.

Liquid side diameter	
ø 9.52/3/8"	
Total pipe length - Standard pipe length x 24g/m	Refrigerant type R32

CAUTION

- Refrigerant charging must be performed after wiring, vacuuming, and the leak testing.
- **Do not** exceed the maximum allowable quantity of refrigerant or overcharge the system. Doing so can damage the unit or impact its functioning.
- Charging with unsuitable substances may cause explosions or accidents. Ensure that the appropriate refrigerant is used.
- Refrigerant containers must be opened slowly. Always use protective gear when charging the system.
- **Do not** mix refrigerant types.

9. Wiring

Safety precautions

WARNING

- Disconnect the power supply before working on the unit.
- All wiring must be performed according to local and national regulations, and must be installed by a licensed electrician.
- Wiring must be done by a qualified technician. Improper connections may cause electrical malfunction, injury, or fire.
- All electrical connections must be made according to the electrical connection diagram located on the panels of the indoor and outdoor units.
- If there is a serious safety issue with the power supply, stop work immediately. Explain your reasoning to the client and refuse to install the unit until the safety issue is properly resolved.
- Power voltage should be within 90-100% of rated voltage. Insufficient power supply can cause malfunction, electrical shock, or fire.
- If connecting power to fixed wiring, install a surge protector and main power switch with a capacity of 1.5 times the maximum current of the unit.
- If connecting power to fixed wiring, a switch or circuit breaker that disconnects all poles and has a contact separation of at least 3mm must be incorporated in the fixed wiring. The qualified technician must use an approved circuit breaker or switch.
- **Do not** let wires touch or rest against refrigerant tubing, the compressor, or any moving parts within the unit.
- **Do not** connect another appliance into the same circuit. If the unit cannot handle the load or there is a defect in the wiring, it can lead to shock, fire, and property damage.
- Connect the power cable to the terminals and fasten it with a clamp. An insecure connection may cause fire.
- Make sure that all wiring is done correctly and the control board cover is properly installed. Failure to do so can cause overheating at the connection points, fire, and electrical shock.

CAUTION

- Connect the outdoor wires before connecting the indoor wires.
- Make sure you ground the unit. The grounding wire should be located away from gas pipes, water pipes, lightning rods, telephone wires or other grounding wires. Improper grounding may cause electrical shock.
- **Do not** connect the unit to the power source until all wiring and piping is completed.
- Make sure that you **do not** cross your electrical wiring with your signal wiring. This may cause distortion and interference.

Take note of fuse specifications

The air conditioner's printed circuit board (PCB) is designed with a fuse that provides overcurrent protection. The specifications of the fuse are printed on the circuit board; examples of such are T5A/250VAC and T10A/250VAC.

Choose the right cable size

The size of the power supply cable, signal cable, fuse, and switch needed is determined by the maximum current of the unit. The maximum current is indicated on the nameplate located on the side panel of the unit. Refer to this nameplate to choose the right cable, fuse, or switch.

Power specifications

Outdoor power supply specifications:

Model		KDI24
Power	Phase	1 phase
	Volt	220 – 240V
Circuit breaker/fuse (A)		25

Outdoor unit wiring

⚠ WARNING

Before performing any electrical or wiring work, turn off the main power to the system.

Electrical requirement

The indoor unit is powered by the outdoor unit. Do not power indoor unit from separate power source.

Cable	Conductor size (mm²)	Type	Remarks
Power cable	2.5	Type 60245 IEC 57	2 core + Earth (Ground) 1 Ø 230 V

Cable	Conductor size (mm²)	Type	Remarks
Interconnect power cable	1.5	Type 60245 IEC 57	2 core + Earth (Ground) 1 Ø 230 V

Cable	Conductor size (mm²)	Type	Remarks
Signal cable	1.0	Type 60245 IEC 57	2 core Shielded

Cable length: Limit voltage drop to less than 2%.
Increase cable gauge if voltage drop is 2% or more.

If the interconnect cable exceeds 30M in length 2.5mm thick cable should be used.

The cable specifications are based on the assumption that a metal or plastic conduit is used with no more than three cables contained in a conduit and a voltage drop of 2%.

Preparing cable

1. **Selecting cable**
   Select the power source cable and connecting cable in accordance with the specifications mentioned below:

   a. Power source cable
   3-core* 2.5mm² or more, conformed with 60245 IEC57.
   When selecting the power source cable length, make sure that voltage drop is less than 2%. If the voltage drop is more than 2%, increase cable thickness.

   b. Connecting cable
   3-core* 1.5mm², conformed with 60245 IEC57.
2. Arrange each wire length as shown. Make sure that each wire is stripped 10mm from the end.
3. Attach round crimp-type terminal to each wire as shown. Select the size of round crimp-type terminal after considering the specifications of terminal block and wire diameter.

Power and interconnect cable

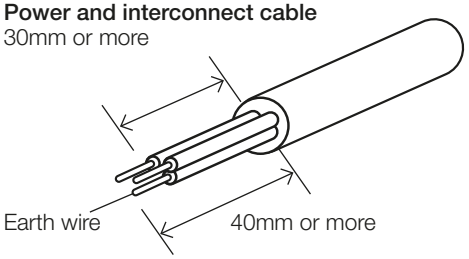

Signal cable

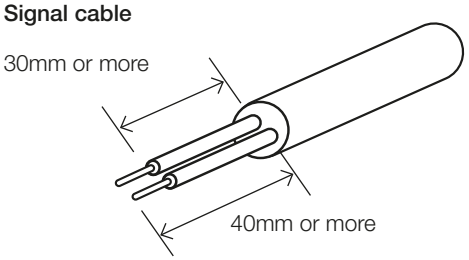

Wire end

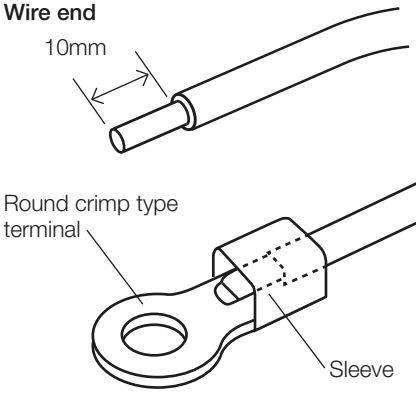

4. Remove two fixing screws, then remove front panel.

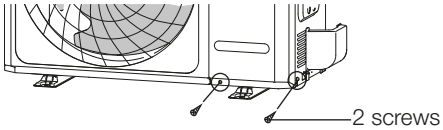

5. Use a hammer and a flat blade screwdriver to knock out the two metal electrical knock outs.

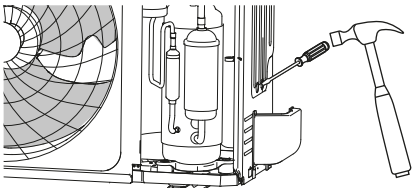

6. Connect the u-lugs to the terminals. Match the correct wire with the correct label on the terminal block. Firmly screw the u-lug of each wire to its corresponding terminal.
7. Clamp down the cable with the wire clamp.
8. The power cables and interconnect power cables will enter the unit separately through the two knock out holes on the bottom right side panel and be fastened with a lock ring adaptor or rubber grommet. Wires should be bound with cable ties and fixed to the internal side of the right chassis panel as shown in the figure below.

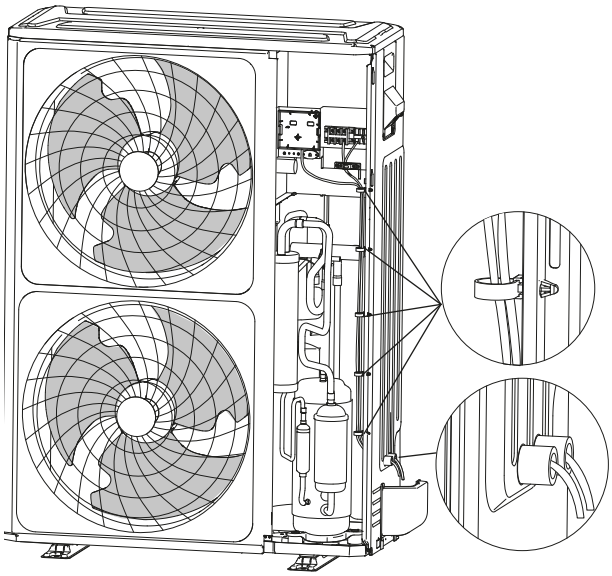

Magnetic ring (if supplied and packed with the accessories)

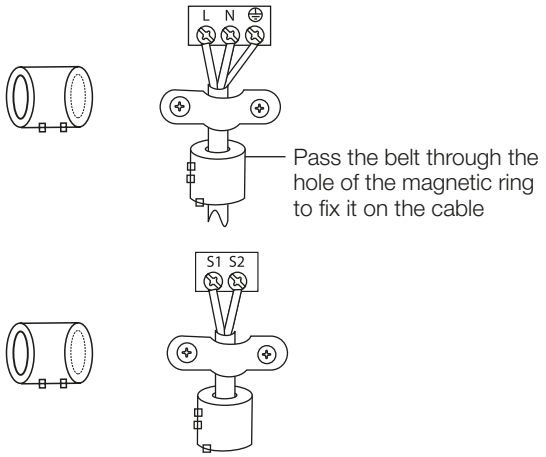

Signal wiring between outdoor and indoor units

Use 2-core shielded data cable to connections S1, S2 and shield on both outdoor and indoor units. Do not run this cable next to high amperage loads. See wiring diagram adhered to the electrical enclosure cover panel.

Indoor unit wiring

1. Prepare the cable for connection
    a. Using wire strippers, strip the rubber jacket from both ends of the signal cable to reveal about 15cm of the wire.
    b. Strip the insulation from the ends of the wires.
    c. Using a wire crimper, crimp the u-lugs to the ends of the wires.

2. Remove the cover of the electric control box on your indoor unit.
3. Connect the u-lugs to the terminals. Match the wire colours/labels with the labels on the terminal block and firmly screw the u-lug of each wire to its corresponding terminal. Refer to the serial number and wiring diagram located on the cover of the electric control box.

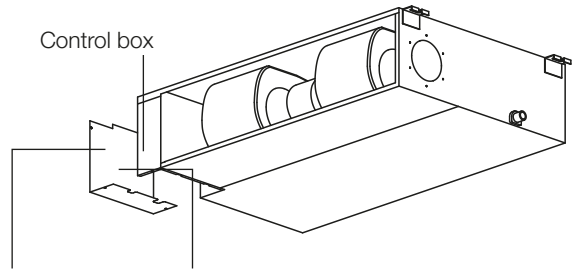

Wiring diagram

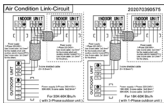

Connective wiring diagram

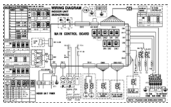

CAUTION

- While connecting the wires, please strictly follow the wiring diagram.
- The refrigerant circuit can become very hot. Keep the interconnection cable away from the copper tube.

4. Clamp down the cable with the cable clamp. The cable must not be loose or pull on the u-lugs.
5. Reattach the electric box cover.

Using the wire controller to set external static pressure

- You can use the unit's automatic airflow adjustment function to set external static pressure.
- Automatic airflow adjustment is the volume of blow-off air that has been automatically adjusted to the quantity rated.

1. Make sure the test run is done with a dry coil. If the coil is not dry, run the unit for 2 hours in FAN ONLY mode to dry the coil.
2. Check that both power supply wiring and duct installation have been completed. Check that any closing dampers are open. Check that the air filter is properly attached to the air suction side passage of the unit.
3. If there is more than one air inlet and outlet, adjust the dampers so that the airflow rate of each air inlet and outlet conforms with the designed airflow rate. Make sure the unit is in FAN ONLY mode. Press and set the airflow adjustment button on the remote control to change the airflow rate from H or L.
4. Set the parameters for automatic airflow adjustment. When the air conditioning unit is off, perform the following steps:
   – Press the **COPY** button.
   – Press **+** or **–** to select the AF.

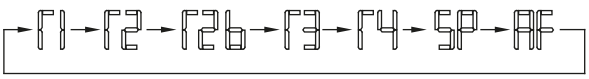

   – Press **CONFIRM**. The air conditioning unit will then start the fan for airflow automatic adjustment.

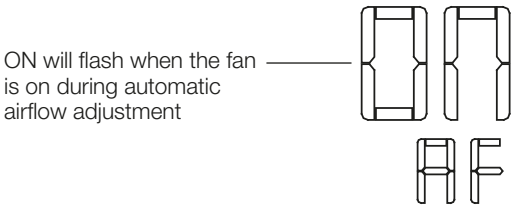

CAUTION

- **Do not** adjust the dampers when automatic airflow adjustment is active.

After 3 to 6 minutes, the air conditioning unit stops operating once automatic airflow adjustment has finished.

CAUTION

- If there is no change after airflow adjustment in the ventilation paths, be sure to reset automatic airflow adjustment.
- If there is no change to ventilation paths after airflow adjustment, contact your dealer, especially if this occurs after testing the outdoor unit or if the unit has been moved to a different location.
- **Do not** use automatic airflow adjustment with remote control, if you are using booster fans, outdoor air processing unit, or a HRV via duct.
- If the ventilation paths have been changed, reset airflow automatic adjustment as described from step 3 onwards.

Manual fan setting

The system can be set manually based on four static pressure settings.

Each setting has a low, medium and high speed range.

See fan performance curves on p. 29.

SP No.	External static pressure parameters
SP 1	0 – 40 Pa
SP 2	40 – 80 Pa
SP 3	80 – 120 Pa
SP 4	120 – 200 Pa

When the system is OFF, perform the following steps using the wired controller.

– Press the **COPY** button and hold for 3 seconds.

– Press the **+** or **-** to select the required **SP** buttons.

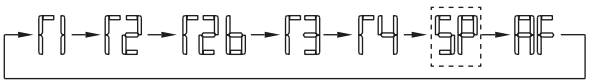

– Press the **CONFIRM** button.



– Press the **CONFIRM** button.

The external static pressure settings are now complete.

KDI24 7.0kW

AIR FLOW (L/S)
(WITH FILTER)

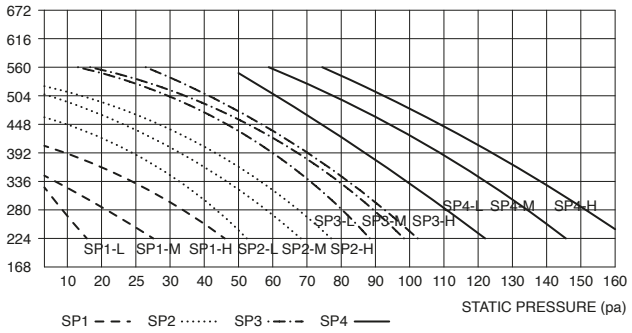

AIR FLOW (L/S)
(WITHOUT FILTER)

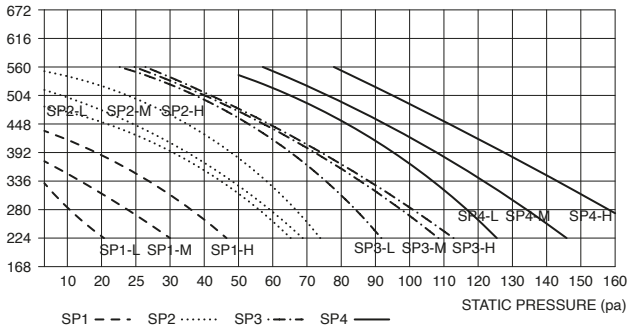

10. Electrical checks

Electrical safety checks

After installation, confirm that all electrical wiring is installed in accordance with local and national requirements, and according to the Installation Manual.

Before test run

Check grounding work

Measure grounding resistance by visual detection and with grounding resistance tester. Grounding resistance must be less than 4Ω.

During test run

Check for electrical leakage

During the **test run**, use an electroprobe and multimeter to perform a comprehensive electrical leakage test.

If electrical leakage is detected, turn off the unit immediately and call a licensed electrician to find and resolve the cause of the leakage.

⚠ WARNING
Risk of electric shock

All wiring must comply with local and national electrical codes, and must be installed by a licensed electrician.

11. Test run

Before test run

A test run must be performed after the entire system has been completely installed. Confirm the following points before performing the test:

1. Indoor and outdoor units are properly installed.
2. Piping and wiring are properly connected.
3. No obstacles near the inlet and outlet of the unit that might cause poor performance or product malfunction.
4. Refrigeration system does not leak.
5. Drainage system is unimpeded and draining to a safe location.
6. Heating insulation is properly installed.
7. Grounding wires are properly connected.
8. Length of the piping and additional refrigerant stow capacity have been recorded.
9. Power voltage is the correct voltage for the air conditioner.

CAUTION

Failure to perform the test run may result in unit damage, property damage, or personal injury.

Test run instructions

1. Open both the liquid and gas stop valves.
2. Turn on the main power switch and allow the unit to warm up.
3. Set the air conditioner to COOL mode.
4. For the indoor unit
    a. Ensure the wired control and its buttons work properly.
    b. Double check to see if the room temperature is being registered correctly.
    c. Ensure the indicators on the wired control and the display panel on the indoor unit work properly.
    d. Ensure the manual buttons on the indoor unit works properly.
    e. Check to see that the drainage system is unimpeded and draining smoothly.
    f. Ensure there is no vibration or abnormal noise during operation.
5. For the outdoor unit
    a. Check to see if the refrigeration system is leaking.
    b. Make sure there is no vibration or abnormal noise during operation.
    c. Ensure the wind, noise, and water generated by the unit do not disturb your neighbours or pose a safety hazard.
6. Drainage test
    a. Ensure the drainpipe flows smoothly. For installations in new buildings, you should perform this test before finishing the ceiling.
    b. Remove the test cover. Add 2,000ml of water to the tank through the attached tube.
    c. Turn on the main power switch and run the air conditioner in COOL mode.
    d. Listen to the sound of the drain pump to see if it makes any unusual noises.
    e. Check to see that the water is discharged. It may take up to one minute before the unit begins to drain, depending on the drainpipe.
    f. Make sure that there are no leaks in any of the piping.
    g. Stop the air conditioner. Turn off the main power switch and reinstall the test cover.

NOTE: If the unit malfunctions or does not operate according to your expectations, please refer to the Troubleshooting section of the Owner's manual before calling customer service.

12. Manual operations

Manual operations

This display panel on the indoor unit can be used to operate the unit in case the remote control has been misplaced or is out of batteries.

- **MANUAL button:** This button selects the mode in the following order: AUTO, FORCED COOL, OFF.
- **FORCED COOL mode:** In FORCED COOL mode, the Operation light flashes. The system will then turn to AUTO after it has cooled with a high wind speed for 30 minutes. The remote control will be disabled during this operation.
- **OFF mode:** When the panel is turned OFF, the unit turns off and the remote control is re-enabled.

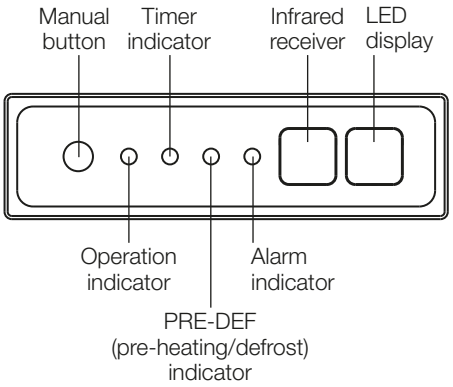

Fig. 12.1

Error codes

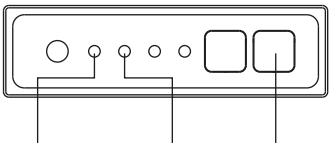

Number	Cause	The number of flashes per second	Timer indicator	Error code
1	Indoor EEPROM (Electrically Erasable Programmable Read-Only Memory) error	1	Off	EH00
2	Indoor and outdoor unit communication malfunction	2	Off	EL01
3	Indoor fan speed malfunction	4	Off	EH03
4	Indoor room temperature sensor error	6	Off	EH60
5	Evaporator coil temperature sensor error	6	Off	EH61
6	Refrigerant leak malfunction	8	Off	EL0C
7	Water level alarm malfunction	13	Off	EH0E
8	Dual indoor unit (twins model only) communication malfunction	9	Off	EH12
9	Outdoor unit malfunction	14	Off	EC0d
10	Communication error between indoor main board chips	9	Off	EH0b
11	Outdoor ambient temperature sensor error	5	Off	EC53
12	Outdoor condenser pipe sensor error	5	Off	EC52
13	Compressor discharge temperature sensor error	5	Off	EC54
14	Outdoor IPM Module temperature sensor error	5	Off	EC55
15	Communication error between master and slave unit (twins system)	11	Off	EL11
16	Outdoor EEPROM (Electrically Erasable Programmable Read-Only Memory) error	5	On	EC51
17	Outdoor fan speed (DC fan motor only) malfunction	12	Off	EC07
18	Inverter module IPM protection	7	Flash	PC00
19	High/Low voltage protection	2	Flash	PC01
20	Compressor top overheating protection	3	Flash	PC02
21	Outdoor high/low pressure protection	4	Flash	PC03
22	Compressor drive error	5	Flash	PC04
23	Compressor low pressure protection	7	Flash	PC03
24	Outdoor IGBT sensor error	8	Flash	PC07

kaden

your perfect climate

kadenair.com.au